2018

www.RAILBLAZA®.com

HOLD EVERYTHING...

Versatile, Easy-to-Use Mounting Systems and Accessories for Leisure and Adventure Sports on and off the Water

CHOOSE A MOUNT

STARPORT

Where it Starts

The RAILBLAZA StarPort is a unique and versatile mount used in a huge number of applications. The StarPort allows users to fit and swap out our full range of RAILBLAZA accessories. Made from high grade engineering plastics, the StarPort is easy to fit and stylish. It can be surface or recess mounted on power boats, inflatables, sail boats, kayaks, ATVs, garages & many other applications...

- StarPorts can be horizontally or vertically mounted in minutes
- Low profile surface mount & minimal intrusion depth when recess mounting
- Includes a stylish locking slide for securing accessories firmly in place
- Gasket and bung reduces water ingress.

Twin Pack
03-4001-11 *Black x 2*
03-4001-21 *White x 2*

Single Pack
03-4015-11 *Black*
03-4015-21 *White*
Fasteners Included

Easy release feature

03-4014-21
White

03-4014-11
Black

Fasteners Included

SIDEPORT

If you need to mount on a vertical surface, but require a horizontal port (or vice versa), the SidePort is the mount for you. It's ideally suited for gunwales of smaller aluminium boats or vertical cockpit wells on kayaks. Fitted in only minutes, and sold with all necessary stainless steel fasteners the SidePort is a fantastic mount and great value for money.

03-4046-11
Black

For track mounting, drill out the centre holes with a 6mm drill from underside

STARPORT HD

Many Kayaks and boats are made to suit the 4 hole base pattern of Scotty, RAM, Cannon, Fish-On, and many others. Now RAILBLAZA's original accessories can easily be fitted to these vessels. After many requests we introduce the StarPort HD. This is a stylish, four screw base mount, which comes with the popular RAILBLAZA locking slide, and is lower in profile than others on the market.

The StarPort HD can also be centrally mounted on many popular track systems, with the added versatility of tool-free adjustment. Just buy our TracMount Kit 03-4109-11, & open up the central hole bosses with a 6.5mm (1/4") drill bit.

Fasteners included

Many Kayak brands use threaded inserts. It is advisable to check the depth and thread of insert before fitting supplied fasteners, as these may need to be shortened. StarPort HD can also be attached using self tapping screws, long tri grip rivets or rubber well nuts.

CHOOSE A MOUNT

RAILMOUNTS 19-25

RAILBLAZA RailMounts are simple-to-use mounts, allowing the easy attachment of RAILBLAZA accessories, and many other things. Simply screw the RailMount together onto your rail, no need to drill holes so you can easily move the RailMount to a different spot, and your rail is as good as new!
The RailMount 19-25 can be mounted onto any 19 or 25mm(0.75 or 1") rail in minutes.
All RailMounts come complete with adapters, rubber grips, self-adhesive grip tape and the necessary stainless steel mounting screws.

RAILMOUNT 19-25
fits round rails 19mm (.75in) to 25mm (1in)

Combo pack

03-4011-11 *Black RailMount & StarPort*
03-4011-21 *White RailMount &StarPort*

Supplied with all necessary fasteners

RAILMOUNTS 32-41

The RailMount 32-41 is specifically designed for both circular and square 32 mm (1.25 in) rails, 41mm (1 5/8") round rails such as those found on Hobie kayak outriggers, and the **New Hobie H-Rail.**

All RailMounts come complete with adapters, rubber grips, self-adhesive grip tape and the necessary stainless steel mounting screws.

NOW FITS HOBIE H-RAIL

RAILMOUNT 32-41
fits round 30mm (1.25in) - 41mm (1.6in) rails, and square 32mm rails

Combo pack **03-4013-11** *Black RailMount & StarPort*
03-4013-21 *White RailMount & StarPort*

Supplied with all necessary fasteners

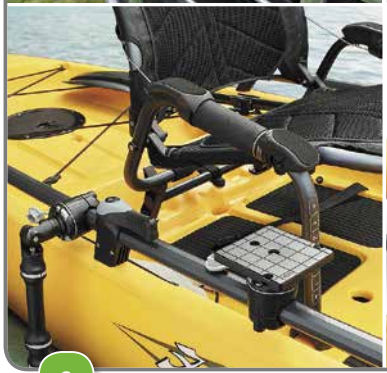

RIB MOUNTS

03-4064-11
RIBPort Black

03-4064-21
RIBPort White

03-4064-51
RIBPort Grey

RIBPORT

Fitting rod holders and other accessories to RIB's & inflatable boats just got easier. Now you can fit accessories like rod holders, bait boards, fish finders and more to RIB or inflatable boats and kayaks without hassle or messy glues. The new 3M VHB pad allows you to peel and stick the RIBPort mount, then fit any of your favorite RAILBLAZA accessories.

The 3M VHB pad is now supplied with every RIBPort pack.

You no longer need a specialised outfitter, or to work with messy glues to install accessories to your RIB or Inflatable, with the RIBPort VHB pad you can install in the comfort of your own garage following the supplied instructions. Our team have run extensive trials on Hypalon and PVC inflatable craft and also recommend the VHB pad for use on epoxy SUP's or surfboards.

The RIBPort can also be attached using the same glues as used to attach handles etc to RIB's & inflatables.

03-4066-11 *Black*

03-4066-21 *White*

03-4066-51 *Grey*

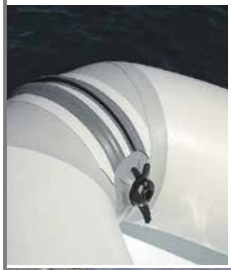

CLEATPORT RIBMOUNT

Bringing the Functionality of the CleatPort to your PVC or Hypalon inflatable boat. It's a simple idea, but very effective. Now your cleat can hold your fishing rod, mobile phone, drink, navilight, or anything else that a RAILBLAZA accessory can hold. The CleatPort RIBmount is supplied with a 3M VHB pad this allows you to peel and stick the CleatPort RIBmount, then fit any of your favorite RAILBLAZA accessories.

STICK ON MOUNTS

RIBPORT

With 3M VHB self adhesive pad.
No glue, no fasteners, just stick it.

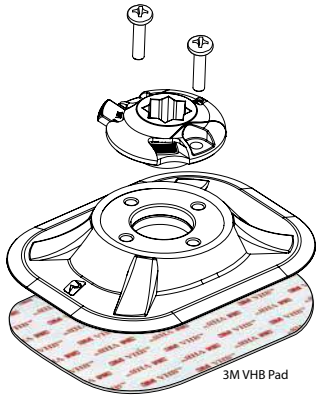

The RAILBLAZA RIBPORT

The only hole you want in your inflatable

Ideal for use on Inflatable boats, SUPs and kayaks. Will bond to PVC, Hypalon, fibreglass, aluminium and much more.

QUIKPORT

This stylish, low profile, stick on mount is easily fitted to most surfaces. It is designed for use where fasteners are unable to be used. Applications include inflatable boats and SUP's. It will also work well on fibreglass SUP's, aluminium and fibreglass decks.

03-4087-11 *Black*

03-4087-21 *White*

The Versatile QuikPort

Stick your camera, nav lights, phone, or drink holder to your inflatable boat or SUP, or almost anywhere else. QuikPort is a stick on StarPort, with a diameter of 90mm (3.5"), and is available in black or white. This small footprint, stick-on, RAILBLAZA StarPort will fit into much tighter spaces than the RIBPort. Made from quality engineering plastics, the QuikPort comes with a 3M VHB self-adhesive pad and can also be glued if that's your preference. Suitable for use on almost any surface, QuikPort is proven to stick well to PVC, Hypalon, fibreglass, epoxy, and aluminium.

CHOOSE A MOUNT

03-4044-11
Black

Fasteners included

CLEATPORT

Two applications in one. The CleatPort gives you a tie off point for stern lines and bow lines on small craft. The StarPort gives the extra functionality of adding any RAILBLAZA accessory. Included is a unique backing plate keeping stainless fastenings isolated from aluminium decks avoiding corrosion.

03-4044-21
White

MINIPORT TRACMOUNT

The MiniPort TracMount is designed to fit most existing kayak tracks, including, Wilderness Systems, Native Watercraft, Yak Gear & YakAttack. Tool-less operation allows easy fitting and adjustment by turning the MiniPort clockwise which tightens directly in the track using our TracNut. To re-position in the track, turn counter clockwise to release. You can also attach to SUP's which have 1/4 20 threaded inserts in the deck, the TracNut would need to be removed.

PLEASE NOTE:
Designed for use in light duty applications.

03-4108-11 *Black*

03-4104-11
StarPort TracMount Kit
StarPort not included

TRACMOUNT KIT

The TracMount kit allows you to attach StarPorts to leading brand kayak tracks, will fit many brands including Wilderness Systems, FeelFree, Yak Gear, Yak Attack.

03-4109-11
StarPort HD TracMount Kit
StarPort HD not included

STARPORT HD TRACMOUNT KIT

The StarPort HD TracMount kit attaches the StarPort HD to most kayak tracks. This gives tool free adjustment and by opening the centre holes, the StarPort HD can be centrally located on the track.

SLIMLINE TRACK

The Slimline Track is supplied in a 300mm (12") length. This compact track will fit most US brand kayaks. The kit is supplied with coarse self-tapping stainless steel screws.

The Slimline Track receives the MiniPort TracMount, StarPort or StarPort HD – with the relevant TracMount kit.

Track dimensions
300mm(12") long x
22.5mm(0.9")wide x
13mm(0.5")high

01-4125-11
Slimline Track 300mm

Available NOV 2017

KAYAK EXPANDA TRACK

The Kayak Expanda Track is a versatile, low profile track which is modular, and can be expanded In 75mm (3") lengths. Made of 15% fibreglass reinforced nylon the track is strong and UV resistant. The Expanda Track receives the MiniPort TracMount, StarPort or StarPort HD – with the relevant TracMount kit.

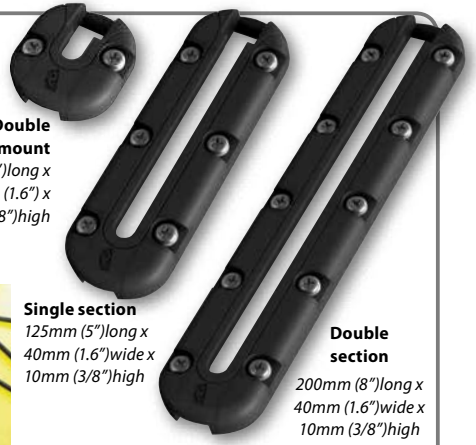

Double end mount
45mm (1.8")long x
40mm (1.6") x
10mm (3/8")high

Single section
125mm (5")long x
40mm (1.6")wide x
10mm (3/8")high

Double section
200mm (8")long x
40mm (1.6")wide x
10mm (3/8")high

The kit includes 4 track lengths, 2 end pieces and screws for 3 mounting options. The parts can be assembled to make a 100mm (4") or 200mm (8") track, or by clipping the 2 ends together you can make a mount which will receive the MiniPort TracMount.

01-4122-11
Expanda Track kit

THE TRACPORT DASH SERIES

Offers versatility and adjustability to your StarPort positioning

The TracPort Dash 350 turns one StarPort into three. TracPort Dash 500 turns two StarPorts into four. StarPorts slide to adjust in track. Extra StarPort TracMounts can be purchased separately.

03-4101-11
StarPort TracMount Kit

StarPort TracMount Kit ordered separately if you need to add extra StarPorts to the track.

03-4103-11
TracPort Dash 350
Includes 350mm (13.75") Track with 3 StarPorts installed and 2 attachment adaptors

03-4102-11
TracPort Dash 500
Includes 500mm (19.5 ") Track with 4 StarPorts installed and 2 attachment adaptors

Used in conjuction with 02-4056-11 Bottle Holder

TRACLOADER

Bass Boat Mounts

TracLoader has been designed to fit the gunwale tracks of most of the aluminium bass boats in the USA. It allows tool free installation of SidePorts and StarPorts to boat brands like Tracker, Stratus, Lund, Ranger and Crestliner. TracLoader can be installed and removed at any point along the gunwale track without tools. Once in place it allows you to fit and swap out our full range of RAILBLAZA accessories.

PLEASE NOTE:
TracLoader does not fit the Slimline or Expanda kayak tracks

NEW

03-4114-11
TracLoader SidePort

03-4115-11
TracLoader StarPort

E SERIES PORTS

E SERIES USB PORT

03-4080-11 *Black*

The E series StarPort with USB combines a USB connector within our StarPort base allowing you to charge your tablets , mobile phones and many other devices.
This can be achieved using our range of device holders and StowPods to hold your device while charging.
The E Series USB is designed for use on a 12 VDC supply, rated at 2.1Amps. For charging only and not for data transfer.

E SERIES DC PORT

03-4081-11 *Black*

Kit includes 1 x Attachment Adaptor

The E series DC Port socket combines a 12VDC 3A plug & socket within our StarPort base allowing the connection of LED spotlights, cabin fans or depth sounders and many other devices.

This enables portability for your devices allowing you to transfer them to different StarPorts or remove and replace with another accessory.

The E series DC Port can also be mounted on the RAILBLAZA range of RailMounts allowing easy mounting and removal for LED floodlights.

Charge tablets via USB Port

Charge USB devices via USB Port

Power 12V Fans via DC Port

Charge phones via USB Port

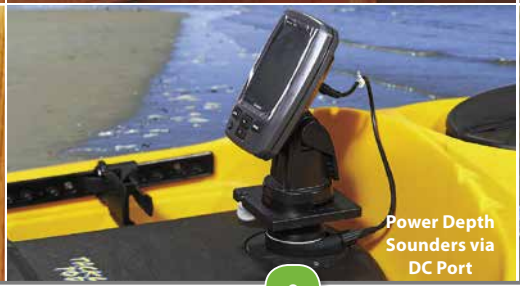

Power Depth Sounders via DC Port

Power LED floodlights Lights via DC Port

DEVICE HOLDERS

02-4045-11 *ScreenGrabba*
04-4045-11 *ScreenGrabba + StarPort Kit*

SCREENGRABBA

These days chartplotter, sounder and even radar output can be read on popular consumer electronics. The ScreenGrabba holds your iPad, Galaxy Tab or other touchscreen firmly, even when it's in a waterproof bag or case.

- Fits 7"- 10" tablets
- 360° rotatable
- Over 90° tiltable
- 250mm max tablet size
- Allows portrait & landscape viewing
- Will hold most hard & soft dry cases

Mobi only
02-4033-11 *Adjustable Mobi*
02-4034-11 *Low Profile Mobi*

Mobi + StarPort Kits
04-4033-11 *Adjustable Mobi + StarPort Kit*
04-4034-11 *Low Profile Mobi + StarPort Kit*

MOBI MOBILE DEVICE HOLDER

The RAILBLAZA Mobile Device Holder, or "Mobi" for short, is ready to look after your phone, GPS, VHF, EPIRB or other mobile device. Our unique design brings a new level of versatility to the device holder market. Once you have your Mobi you can attach it to any vessel or vehicle on water or land - basically any place you can install a RAILBLAZA mount.

Features
- Spring loaded arms
- Rubber grip pads
- Optional retaining strap
- Adjustable and low profile options

Holds
- Cellphone
- VHF
- EPIRB
- Hand held GPS

ROD HOLDER II

The Rod Holder II is robust, versatile, it will hold your rod, you choose which position.

- Rotating collar helps reduce 'strike-theft'
- Rear gimbal lock reduces rod rotation for compatible rods; lift to slide rods through
- Fully adjustable 360° around, over 90° vertical
- Easy access to reel when in position
- Square-tooth adjustable tilt stops rotational slipping.

The Rod Holder II is available either as a kit complete with a StarPort, or as a rod holder by itself.

For spinning reels, baitcaster reels, boat reels, fly reels.
Allows you to fit your Rod Holder to any StarPort, SidePort, RailMount or RIBPort.

Rod Holder only
02-4020-11 *Black*
02-4020-21 *White*

Rod Holder + StarPort Kit
04-4020-11 *Black*
04-4020-21 *White*

Rod Holder + StarPort HD Kit
04-4055-11 *Black*

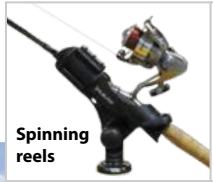

ROD HOLDER R

The RAILBLAZA Rod Holder R is the little brother to the Rod Holder II. It is designed for holding fishing rods with spinning , baitcaster or fly reels. To secure your rod the stretchable strap at the front of the holder will wrap around the top for baitcaster and fly reels and round the bottom for spinning reels.

The Rod Holder R is a light duty rod holder suitable for fresh water & in shore fishing. It is not designed for trolling. If you need a Rod Holder for trolling check out our Rod Holder II. The Rod Holder R is available either as a kit complete with a StarPort HD, or as a rod holder by itself.

Rod Holder R only
02-4082-11 *Black*

Rod Holder R + StarPort HD Kit
04-4082-11 *Black*

ROD TUBE

NEW

The Rod Tube has been designed to answer a lot of requests from customers. It is perfect for kayaks where anglers want to keep their reels elevated and clear of waves and splash.
With the innovative RAILBLAZA drop-down gimbal, you can either keep your reel high and dry, or slot the reel into the end of the tube.

The Rod Tube is available as a complete kit with StarPort HD or as Rod Tube only to fit all other RAILBLAZA Ports

Rod Tube only
02-4118-11 *Black*

Rod Tube StarPort HD Kit
04-4118-11 *Black*

FILLET TABLE

When you need a bit of 'chop' on the water

The 525 x 350mm (20.7x13.8in) design allows for knife storage, has an all round drain (with fitting for hose underneath) that stops spill from the front, and no front lip to get in the way while filleting (includes two adjustable platforms). Fillet Table can be raised 125mm (5in) with the addition of StarPort Extenders (as shown on page 22).

02-4024-11 *Fillet Table with platforms only*
04-4024-11 *Fillet Table including StarPorts and platforms*

ROWLOCKS

The RAILBLAZA Rowlock adds the versatility of the RIBPort to your inflatable. Fit the Rowlock to the RIBPort ready for rowing then when not in use you can remove and stow the oar. Now you can attach any of the other RAILBLAZA accessories, like rod holders, drink holders or mobile device holders. Fits most standard aluminium oars.

02-4047-21
White

02-4047-11
Black

CLEVIS/BIMINI SUPPORT

Attach a bimini, kayak sail, light pole or many other items to your boat, kayak, or anything else.

Allows easy detachment of Bimini when not in use.

02-4032-21
White twin packs

02-4032-11
Black twin packs

TRANSDUCER MOUNTS

KAYAK/CANOE SOUNDER & TRANSDUCER MOUNT

Kit Contents
- SwivelPort
- Adjustable Knuckle joint
- Fixed StarPort Extender
- Cheek Mount Adaptor
- Rotating Platform (Only for 02-4060-11)
- 4 x cable ties, 1x mounting screw

02-4060 -11 *Kit*
02-4061-11 *Arm only*

NOTE:
The transducer arm does not come with any Mounting Ports.
Mounting Port options: ordered separately.

KAYAK/DINGHY TRANSDUCER ARM XL

02-4086-11

Kit Contents
- SwivelPort
- Adjustable knuckle joint
- Extender arm
- 4 x cable ties, 1x mounting screw

The Sounder & Transducer Mount has been developed for kayak anglers needing an easy way to install and remove fish finders or sounders. With this kit you can install and uninstall your fishfinder, sounder & transducer in a matter of seconds. With our extensive selection of mounts this kit can be adapted to fit any kayak or canoe.

The Transducer Arm XL is designed for kayaks and canoes with high freeboards, and dinghys with a solid transom allowing easy retraction and removal of the depth sounder transducer. With this kit you can install and uninstall your fish finder transducer in a matter of seconds. No messy adhesives or excessive drilling of fittings required. With our extensive selection of mounts (not supplied) this arm can be adapted to fit any kayak, canoe or dinghy. **We recommend to retract if doing speeds over 8 knots.**

UNIVERSAL KAYAK MOTOR MOUNT

Super easy to clip on and off, your kayak can change from paddle only, to motor ready in under 30 seconds. This bracket will fit most models of kayak, and is suitable for, but not limited to the following motors:

- Minn Kota, all transom mount models
- MotorGuide, all transom mount models
- Water Snake, all transom mount models
- Torqeedo, all transom mount models

Length: 980mm (38.5in)
Motor Pad size:
160mmH x 180mmW
(6.3in x 7in)

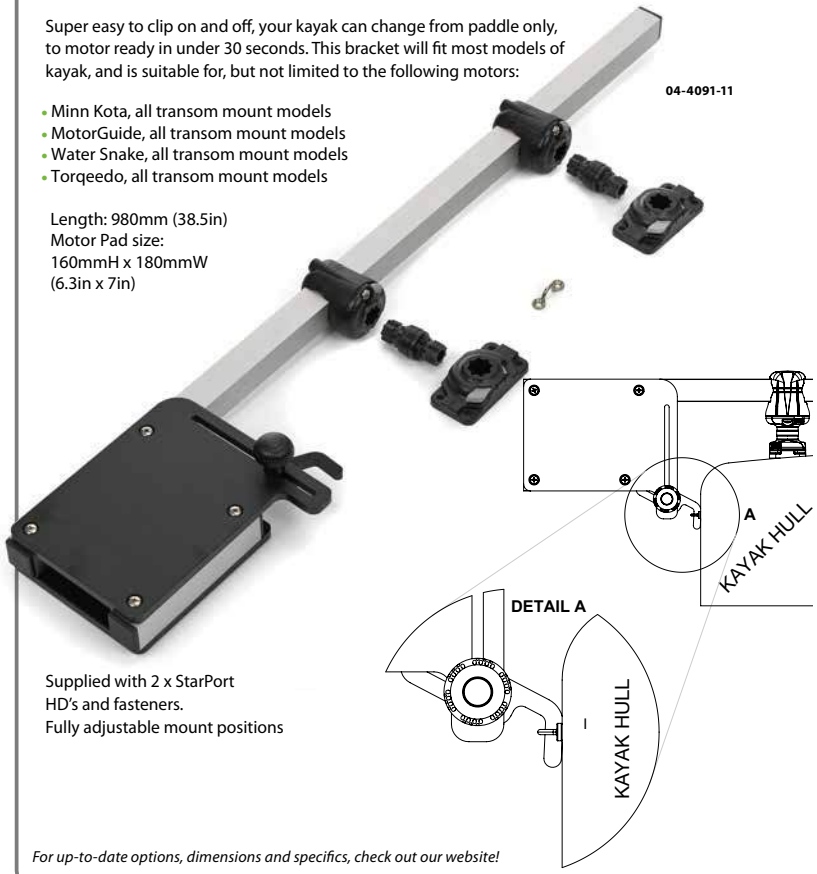

Supplied with 2 x StarPort HD's and fasteners.
Fully adjustable mount positions

For up-to-date options, dimensions and specifics, check out our website!

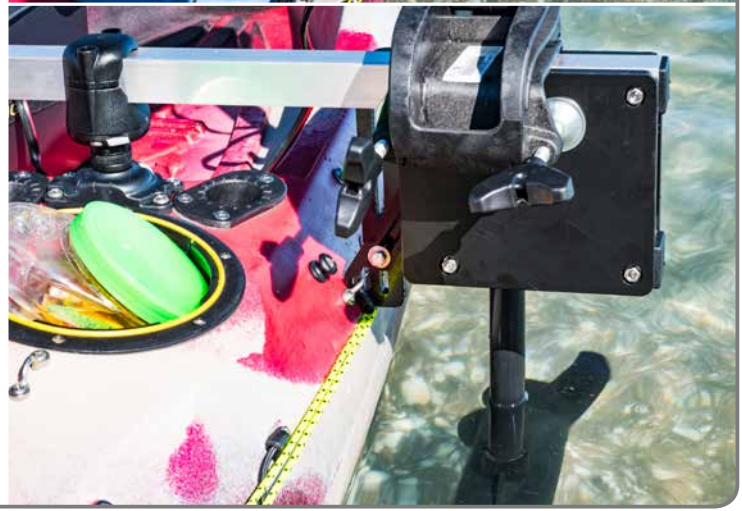

ATTACHMENTS

Twin Packs
02-4004-11
Black HOOK25

Twin Packs
02-4003-11
Black EYE25

Twin Packs
02-4005-11
Black WEBEYE30

HOOK25, EYE25, WEBEYE30

These simple accessories can be used in a myriad of ways. WEBEYEs are used for webbing straps to reduce fold over. Each accessory is supplied in twin packs.

ATTACHMENT ADAPTOR

RAILBLAZA attachment adapators are designed to make many items StarPort compatible. You can also bolt the 2 adaptors together to make a male to male fitting.

The male to male fitting has been used to create a detachable system for tubes on kayak sailor kits & outriggers & has many other applications, enhancing the versatility of the RAILBLAZA StarPort system.

02-4043-11
Adaptor Pair

Adaptors can be bolted together to create a male to male adaptor

CupClam only
02-4013-11 *Black*
02-4013-21 *White*

CUPCLAM

Can be mounted in either horizontally or vertically mounted StarPorts, to hold mugs, stubbies, wine glasses, even cellphones. The exteninto a convenient flatpack for storage. If you can't hold your drink, tdangers holdble fi the taller items in place, yet everything collapses he CupClam will.

DRINK

Simplicity and ver
vertical or horizon
to coffee mugs alc
Like all our StarPo
another port or st

02-4048-11
Black

04-4048-11
Black incl StarPort

02-4048-21
White

04-4048-21
White incl StarPort

HOLD

rsatility, the Drink Hold can be easily mounted into a
tal StarPort and will hold anything from drink bottles
ong with the ability to hang fishing lures or store pliers.
rt accessories it is easily removed and transfered to
owed when not in use

StowPod only
Including Star Adaptor & fasteners
02-4040-11 *Black*
02-4040-21 *White*

StowPod + StarPort Kit
04-4040-11 *Black*
04-4040-21 *White*

STOWPOD

- Holds pliers, keys, lures, phones, VHF's, binoculars, drink bottles, sunblock, mugs & much more...
- Movable drink holder partition
- Mounts into any vertical or horizontal StarPort or can be permanently fastened in place
- Mounts on rails or inflatables by adding the right RAILBLAZA mounts
- Available in black or white
- Easily removed and stowed when not in use or transfered to another position.
- 255mmW x 88mmH x 05mmD (10"W x 3.5"H x 4.5"D) excl Star Adaptor
- UV resistant material.

CAMERA MOUNTS

02-4036-11
Camera Boom 600 Black

02-4037-11
Platform Boom 150 Black

PRO SERIES BOOM MOUNTS

The perfect way to hold your camera and capture the action when you're hauling in a record-breaking marlin or about to take line honours. At over 600mm (24in) long and fully adjustable with 5 moving joints, the Camera Boom 600 is so flexible it has been asked "how did they ever shoot that angle?". The camera platform can be be removed from the top of the Boom and repositioned in other StarPorts or TelePole to capture even more angles.

The Platform Boom 150, will allow the mounting of heavier items – up to 2.5kg (5.5lb) – including sounders and GPS displays, but still give the flexibility of 5 moving joints. It can also be dismantled into 3 components for re-tasking, emphasising the full versatility of the RAILBLAZA system.

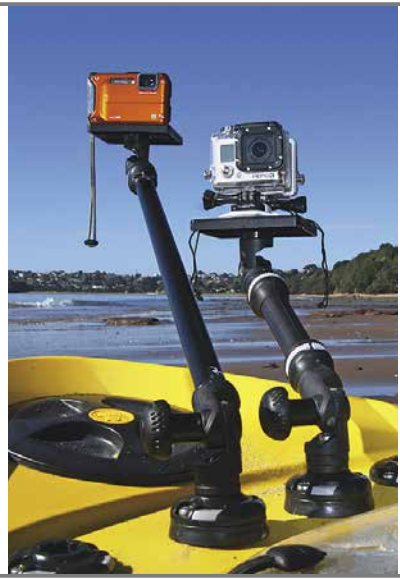

CUSTOMISE YOUR CAMERA MOUNTS

The versatility of the RAILBLAZA system lets you customise your camera mounts allowing you to extend booms and create stabilising arms giving you that special angle ensuring you to get the best possible footage.
Visit **www.railblaza.com** for more information.

CAMERA MOUNT KIT

(Including 3 axis knuckle joint and adaptor)

This compact option allows you to adjust your camera to every angle, with factory set friction joints your camera will stay steady. You can also transfer it to any **RAILBLAZA** mount.

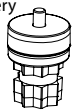

Features

- Fits all cameras with a ¼ 20 thread insert allowing them to become StarPort compatible
- Kit includes GoPro tripod adaptor
- Mounts on Rails, Boats, Kayaks and Inflatables with the correct **RAILBLAZA** mount
- Can be extended using **RAILBLAZA** Camera Booms or Extenders
- UV stabilised materials.

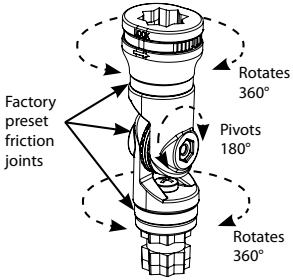

02 4054-11
Camera Mount Kit

CAMERA MOUNT ADAPTOR

The Camera mount adaptor will fit all cameras with a ¼ 20 thread insert allowing them to become StarPort compatible.

Also includes GoPro Tripod adaptor.
Fits any **RAILBLAZA** mount.

02-4053-11
Camera Mount Adaptor

PLATFORMS

ROTATING PLATFORM

A platform for mounting sounders or chartplotters, where a fixed plane surface is required, but rotation is needed.
Platform size
102 x 102mm (4 x 4in).

02-4021-11 *Black*

ADJUSTABLE PLATFORM

Allows the attachment of any platform-type product to a StarPort, eg: Fillet Tables, barbecues, tables, solar panels etc. Adjustable angles forward and back 90°. Supplied in singles. Platform size 100 x 64mm (4 x 2.5in).

Platform only
02-4002-11 *Black*
Platform + StarPort kit
04-4002-11 *Black*

THREE-AXIS PLATFORM

The Three Axis Platform is the answer if you need real flexibility in a mount. Designed with sounders and GPS devices in mind, you can now mount on angled surfaces & have your display level. Platform size 102 x 102mm (4 x 4in).

02-4025-11 *Black*

STARPORT EXTENSIONS

EXTENDER

StarPort Extenders plug into any StarPort, and have the same star shape on top with a clever little lock. The Fixed Extender gives you 125 mm (5 in) of clearance from the StarPort - perfect for raising RAILBLAZA's Fillet Table, keeping fly rods clear of the water, and many other applications.

03-4016-11
Black

ADJUSTABLE EXTENDER

With two rotating joints and a knuckle joint that tilts in 15° increments, the Adjustable Extender adds great versatility. When coupled with one of RAILBLAZA's large range of accessories, it helps keep hold of your emergency torch, fishfinder, or any number of useful items.

03-4017-11
Black

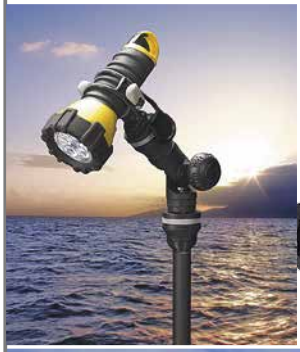

SWIVELPORT

The SwivelPort is designed to allow accessories to be easily rotated 360°. Factory set friction joint. Can be attached to any StarPort, SidePort or RIBPort and will receive any StarPort accessory.

03-4042-11
Black

HOLD IT SAFE

G-HOLDS

Hold varying types of items, like torches, knife sheathes, boathooks, oars, gaffs and much more.

- Three diameters - 35, 50 or 75 mm (1.3, 2 or 3 in)
- They fit into any RAILBLAZA StarPort
- The flexible quick-release strap has two securing points for minimum and maximum diameters.

02-4026-11 *Black 35mm*
02-4027-11 *Black 50mm*
02-4028-11 *Black 75mm*

02-4052-11
Black

GUNHOLD

The GunHold allows you to safely stow and transport your gun. The flexible rubber fingers shape to fit different gun butts and the strap secures the gun against vibration & damage. Will fit into all RAILBLAZA mounts. Sold singularly, however we recommend 2 units per rifle or shotgun.

We strongly recommend the RAILBLAZA GunHold is used in accordance with requirements of firearms legislation for the jurisdiction you are in.

DIVE & GAS BOTTLE HOLDER

The Dive & Gas Bottle Holder can be used for holding dive bottles , gas bottles, fuel and water cans. Can be permanently mounted using fasteners supplied or made removable using our StarPort mounting system.

Kit includes:

- 2 x Brackets
- 2 x Straps
- 2 x Ladder locks
- 1 x Side release buckle
- 2 x Star Adapters for use when mounting into StarPorts
- 2 x Screw packs to allow permanent mounting

02-4056-11
Black

Applications

Rail Mounted StarPorts | StarPorts | StarPorts

Mounting options: Ordered Separately (refer to Mounting option pages).

04-4062-11
Black

TRACPORT DIVE & GAS BOTTLE HOLDER KIT

The TracPort Dive & Gas Bottle Holder kit is a fully adjustable system allowing you to safely retain different sized dive bottles, gas bottles, fuel and water cans and even rubbish bins. Adjustable straps with quick release buckles allow for easy operation and full versatility.

Double bottle setup. Can be adjusted for different sized dive bottles. Once spaces for StarPorts has been decided, drill holes in TracPort to mount StarPort Adaptors - or fasten TracPort directly to surface.

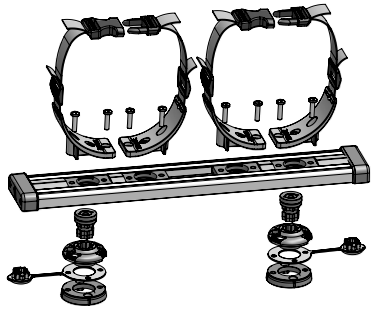

PUSH POLE MOUNTS

QUICKGRIP PUSH POLE HOLDER

NEW

Secure your push pole when not in use

- Clamps tightly to push pole
- Rotates 360 degrees
- Pivots 180 degrees
- 2 sizes available
- Supplied with StarPort and fasteners.
- Allows for easy removal for stowage or adding other accessories

04-4116-11
QuickGrip Push Pole Holder 28mm (1 1/8" to 1 3/8")

04-4117-11
QuickGrip Push Pole Holder 32mm (1 1/4" to 1 5/8")

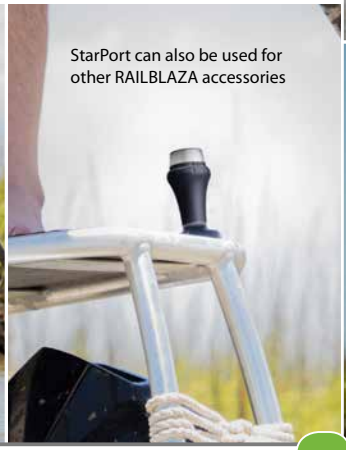

StarPort can also be used for other RAILBLAZA accessories

QUICKGRIP PADDLE CLIP TRACK MOUNT

NEW

The QuickGrip Paddle Clip Track Mount will fit most kayak tracks including RAILBLAZA Expanda Track, Ascend, Wilderness Systems, Native Watercraft, YakGear and Yak Attack.
Easy to fit and holds most standard paddle shafts.

08-0052-11
QuickGrip Paddle Clip Track Mount 28mm (1 1/8" to 1 3/8")

QUICKGRIP PADDLE CLIP STAR MOUNT

NEW

The QuickGrip Paddle Clip Star Mount will fit any RAILBLAZA port. Ideally suited for holding kayak or SUP paddles. They can also be used for storing landing nets, boat hooks and many other items that have a round shaft.
Available in two sizes 28mm and 32mm

02-4120-11
QuickGrip Paddle Clip Star Mount 28mm (1 1/8" to 1 3/8")

02-4121-11
QuickGrip Paddle Clip Star Mount 32mm (1 1/4" to 1 5/8")

HATCH WEDGE

NEW

Being regular boaties we got tired of the friction hinges not holding our hatches up. After getting frustrated at finding objects to hold the hatch at different heights the idea of a multi position hatch wedge was born.

Simple, but effective, the pattern of ridges and recesses will stop it from slipping out.

It holds the hatch open at 25, 50, 75, and 125mm (1, 2, 3 and 5"), and can be easily tethered.

Suitable for most hatches including Lewmar, Goiot, Moonlight, Vetus, Bomar, Gebo and Maxwell.

09-0006-11
Hatch Wedge pair

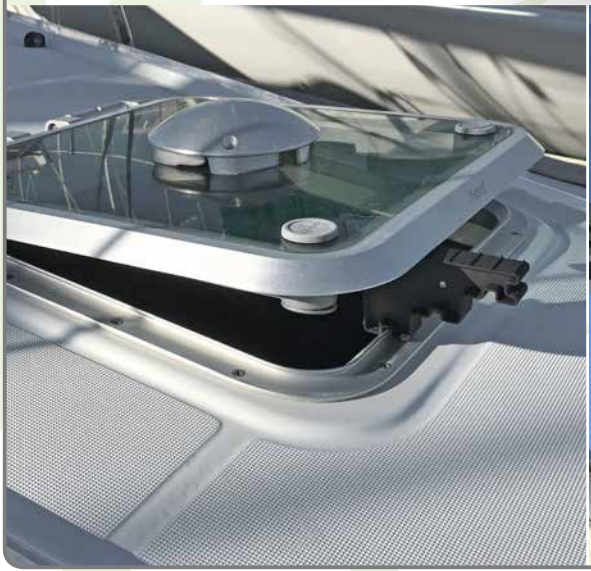

ILLUMINATE i360

Battery powered all round white navigation light

- Designed and made in New Zealand using high quality materials, and the latest LED technology
- **3 operation modes**
  - Full brightness navigation mode 2NM – up to 25hrs battery life
  - Low brightness work mode – up to 160 hrs battery life
  - Flashing emergency mode – over 200hrs battery life
- Waterproof to 1 metre
- Floats with lens clear of water
- Powered by 3 x AA batteries, not supplied
- Fits any RAILBLAZA mounting port, ordered separately.
- Meets USCG 2NM 33 CFR 183.810 & ABYC A-16 2 nautical mile visibility

02-5004-11
All round white light

The i360 meets the required standards for an all-round white navigation light for power and sailboats under 12 metres, and kayaks & canoes. To maximise battery life we have used a high quality, Japanese made, Nichia power LED and a high efficiency digital circuit. It is lightweight, and IP67 rated for dust and water ingress. AA batteries mean many more light hours for your dollars when compared to AAA, and as it's battery powered there's no need for external wiring and switching.

Meets USCG 2NM

ILLUMINATE iPS

Battery powered Bi-Colour LED Navigation Light

iPS Light Features

- Designed and made in New Zealand using high quality materials, and the latest LED technology
- **3 operation modes;**
  - Bi-Colour Port Starboard mode 2nm, 12-14hr battery life
  - Port light only mode, 2nm, 20-24hr battery life
  - Starboard light only mode, 2nm, 20-24hr battery life
- Waterproof to 1 metre
- Floats with lens clear of water
- Powered by 3 x AA batteries, not supplied
- Fits any RAILBLAZA mounting port, ordered separately
- Meets USCG 2NM 33 CFR 183.810 & ABYC A-16 2 nautical mile visibility.

02-5005-11
Port/Starboard

Independently tested by Imanna Labs USA

NAV LIGHT PACKS

KAYAK VISIBILITY KIT II

This kit provides you with everything you need for your Kayak/Canoe to be seen on the water day or night.

Kit includes:

- Extenda Pole 1000
- Flourescent orange flag
- Illuminate i360 All Round white LED light
- StarPort HD mount
- 1 x Fastener pack
- 1 x velcro strap for storage of Extenda Pole

The Extenda Pole 1000 can also be used as an elevated camera mount using the RAILBLAZA camera mounts and for the attachment of a dive or national flag.

Meets USCG 2NM

04-4084-11
Kayak Visibility Kit
includes all fasteners

DINGHY VISIBILITY KIT

NEW

For vessels under 7 meters that do not exceed 7 knots. This kit provides you with everything you need to be seen on the water at night.

Kit includes:

- Extenda Pole 1000
- Illuminate i360 All Round White LED light USCG2NM
- SidePort easily fitted to dinghy transom
- 1 x fastener pack
- Handy storage bag with draw string

04-4119-11
Dinghy Visibility Kit
includes all fasteners

Meets USCG 2NM

NAV LIGHT PACKS

NAVIPACK

Portable LED Navigation Light Kit

Kit features:

- No wires required
- Each light uses 3 x AA batteries (not included)
- Lights meet USCG 2nm standards
- Pole disassembles for easy stowage in bag supplied
- Easily detached using RAILBLAZA StarPort mounts
- Comes with tidy storage bag
- All fasteners supplied

Kit includes

1 x Storage bag, 1 x Extenda Pole 1000, 1 x i360, 1 x iPS, 1 x StarPort, 1 x SidePort, 1 x QuikPort (with 3M VHB adhesive pad), 1 x fastener pack

Meets USCG 2NM

04-4092-11
Navipack
includes all fasteners

FLAGPOLE

Light and strong, whether you need to mount a diving flag or just proudly display your allegiance to your club, sport, country or hoist the Jolly Roger. Easily removed for stowing. 800mmL (31.5")

02-4009-11
Black Base

FLAGWHIP

Light, mobile & flexible, ideal for kayaks, ATVs or wherever you need to be seen.

02-4010-11
Black Base

- Increase visual presence on the water or farm
- 1200mm in length (47.25")
- Comes with 300 x 150mm pennant (12" x 6")
- Easily removed for transporting

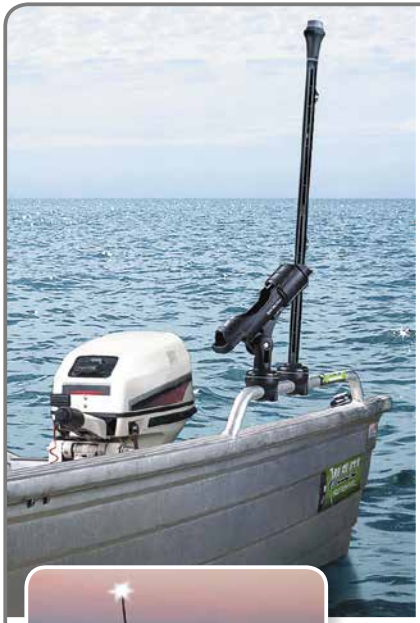

Use with your imagination, torch, camera, lights, action...

02-4067-11
Extenda Pole 1000

EXTENDA POLE 1000

The Extenda Pole 1000 adds another dimension of versatility to the RAILBLAZA system. With a male StarPort adaptor at one end and a female StarPort at the top it is fully collapsible for easy stowing.
It can be used at 3 different heights:

- 1 section height 380mm(15")
- 2 sections height 680mm (27")
- 3 sections height 980mm (38.5")

Fly a flag attach a light, attach a camera mount kit or adjustable extender with a G-Hold to hold a torch. Fits into any StarPort, SidePort, RailMount or RIBPport.

C.W.S. CARRY, WASH AND STORE BAG

Carrying, washing and storing your valuable RAILBLAZA equipment is now a lot easier with the C.W.S. Bag.
Simply remove the accessories from the StarPorts at the end of the day stow them into the mesh C.W.S. Bag, run the bag under a fresh water tap or hose to rinse off any salt or dirt and hang to dry.
The C.W.S. can also be used as a safety flag when used in conjunction with the RAILBLAZA Extenda Pole 1000.

02-4068-81
Mesh C.W.S. Carry, Wash and Store Bag

450mm x 450mm (18" x 18")

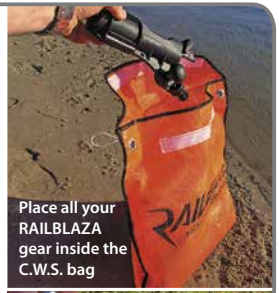

Place all your RAILBLAZA gear inside the C.W.S. bag

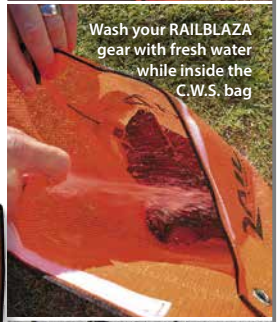

Wash your RAILBLAZA gear with fresh water while inside the C.W.S. bag

Hang to drain and dry

STARPORT WALL SLING

Sling Your Yak or SUP – with RAILBLAZA!

Storage of a wide range of watercraft including SUPs, canoes, windsurfers and kayaks just got quicker and easier with the RAILBLAZA StarPort Wall Sling. Installed in minutes and supplied with StarPorts, slings, adjustment buckles and screws the StarPort Wall Sling is great value for money. The Wall Sling will free up space in your garage, shed or yard by allowing you to hang your craft on the wall. You can hang it outside on one pair of StarPorts to wash down, and then easily transfer it to another pair of StarPorts inside to keep it warm and dry! If you want to use your sling at another location like your holiday home it's as cheap and easy as fitting two more StarPorts. Kit includes 2 Slings.

04-4050-11
Sling pair

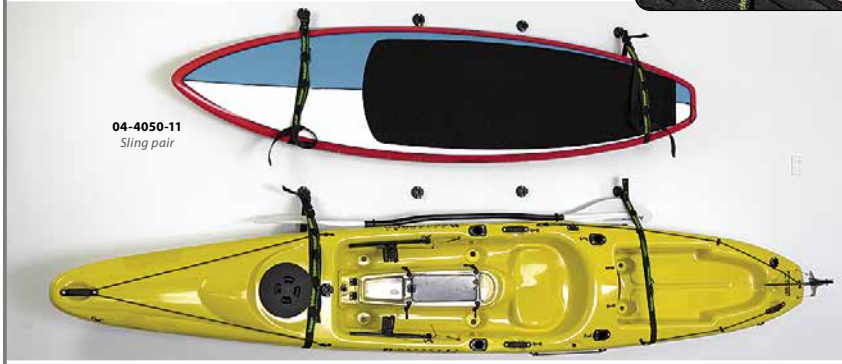

Using 2 sling pairs, mounting one board inside the other to reduce space

C-TUG®
BY RAILBLAZA

SANDTRAKZ™

Longer is better than wider

The Ultimate Kayak & Canoe Sand Cart

The New Zealand made SandTrakz Cart is setting new standards with its sophisticated style and precision design. C-TUG SandTrakz is the best, most versatile and durable kayak cart on the market. It carries up to 80kg (170lbs), dismantles for easy stowing and won't corrode

When it comes to moving loads over soft sand, wider wheels are not necessarily better. Bulldozers and military tanks use long tracks, reducing the chance of them digging in. SandTrakz puncture free wheels mimic this track system, the outer rim compresses when in use giving a longer track length. On soft sand this reduces how hard you have to pull to move your cart by more than half compared to standard puncture free Kiwi Wheels! In fact the SandTrakz system is so effective we think it's better than balloon wheels!

- **Half the effort**
- **Puncture free**
- **Fits inside hatches**

Whilst they are designed to make life easier on soft surfaces, SandTrakz wheels are also great on hard surfaces. Because C-TUG SandTrakz are designed to compress they act like suspension on hard surfaces, making for easy transition from soft to hard surfaces. Patent pending, C-TUG SandTrakz carts are made in New Zealand.

Part no: 50-0006-71

Packaged box size 620mm x 320 x 180mm (24.4" x 12.6" x 7") Weight: 5.4Kg (10.8lbs)

SandTrakz Wheels

An easy upgrade for your standard C-TUG cart to give it all the features of a SandTrakz cart. (Fits any C-TUG old or new)

Part no: 50-0005-71

(Supplied as a pair)
Diameter = 315mm (12.5")
Width = 90mm (3.5"),
Bore = 25.4mm (1")

EXPAND YOUR CART

C-TUG is more than just a kayak cart. It is now suitable for dinghies and inflatable boats by adding a Double Up Bar

For C-TUG Double Up
Order:
- 2 x 50-0001-71 C-TUG Carts
- 1x 50-0007-71 Double Up Bar

For SandTrakz Double Up
Order:
- 2 x 50-0006-71 SandTrakz Carts
- 1 x 50-0007-71 Double Up bar

Kiwi Wheels

Puncture free with hi-grip rubber tread. If you have an old C-TUG with pneumatic wheels and want to upgrade, all you do is clip off your old wheels, and clip on the new ones, easy as!!

Part no: 50-0002-71

(Supplied as a pair)
Dimensions: Dia. 260mm (10"), Width. 90mm (3.5")

Double Up Bar

Makes your C-TUG carry more

The Double Up Bar allows you to assemble 2 x C-TUGs together spreading the load and allowing you to carry heavier kayaks or boats. The bar is a specific length to keep the wheels close together allowing the double cart to be turned easily. Once loaded and balanced no lifting is required all you have to do is pull it. Works with the standard C-TUG & SandTrakz version. Fits any C-TUG old or new.

Made in New Zealand

WWW.C-TUG.COM

- Easily disassembled
- Supplied with 2 x extended straps
- Carry weights up to 160kg (350lb) static loading
- Works with C-TUG and C-TUG SandTrakz
- Ideal for heavy kayaks, dinghies & inflatable boats

50-0007-71 includes 1 x Double up Bar, 2 x Straps (C-TUGS ordered separately)

C-TUG®
BY RAILBLAZA

The Ultimate Kayak & Canoe Cart

The C-TUG kayak cart is designed and manufactured in Napier, New Zealand. Unlike any other cart in the paddle sport arena today, C-TUG continues to amaze sport enthusiasts with its rugged appeal, incredible strength and satisfying good looks

C-Tug Cart

The New Zealand made C-TUG is the best, most versatile and durable kayak cart on the market. It carries up to 120kg (260lbs), dismantles in under 20 seconds to fit into a kayak hatch and won't corrode.

Part no: 50-0001-71

Packaged box size: 580mm x 270mm x 200mm (23" x 10.5" x 8") 4.4kg (10lbs)

- Reinforced composite material
- Tool-free assembly
- Dismantles in under 20 seconds
- Fits inside kayak hatch
- Thermo-bonded elastomeric hull pads
- Stainless steel reinforced axles
- Puncture-free wheels with hi-grip rubber tread
- 2.8m (9') strap with aluminium camlock buckle
- Adjustable kick-stand
- Light weight 4.3 kg (10lbs) and easy to handle
- 120kg (260lbs) static loading (capacity will vary with dynamic loading on different terrains)

RAILBLAZA LTD
Email: info@railblaza.com
Ph: +64 9 426 1475

For all product dimensions, specs and YouTube tutorials please refer to the our website

www.railblaza.com

Railblaza has many registered designs & patents. All IP infomation is listed on our website

RAILBLAZA reserve the right to change specifications, product descriptions and model applications at any time without notice and without further obligation. **We assume no liability for any errors in listings, specifications, part numbers or model applications.**